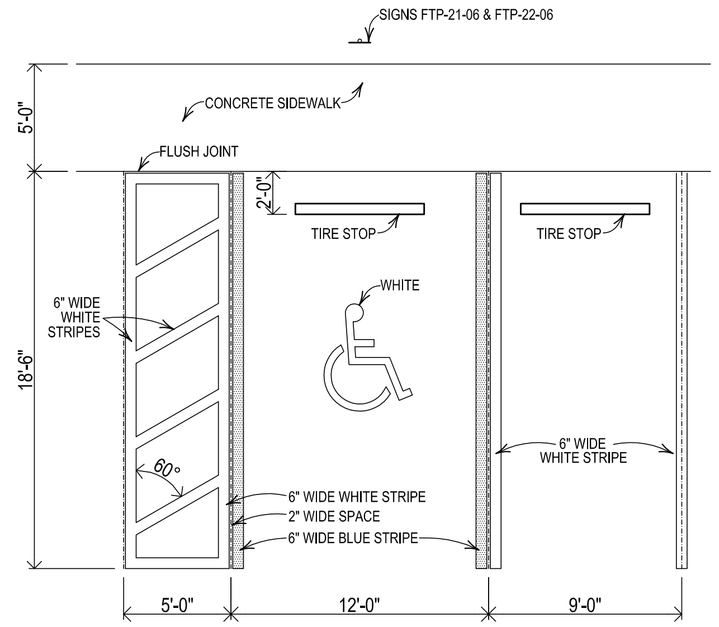

PARKING SPACE STRIPING AND SIGNAGE

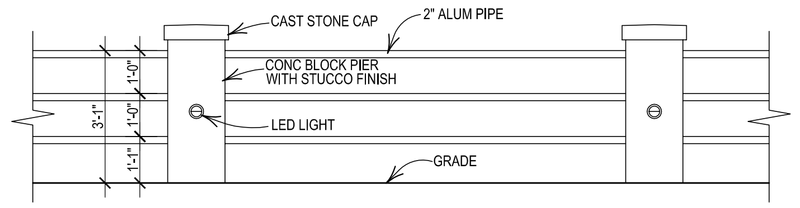

DECORATIVE FENCE

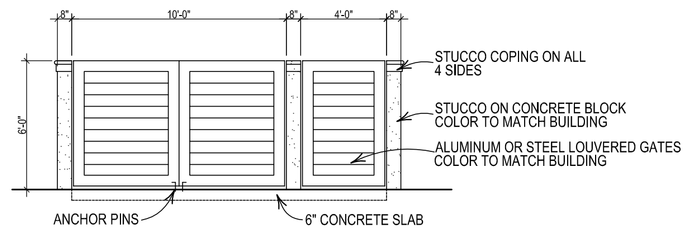

DUMPSTER ENCLOSURE

ZONING: CG (PS)
LAND USE: COMMERCIAL
EXISTING USE: PRIVATE SCHOOL

PARKING DATA

USE	REQUIREMENT	PROVIDED
ADULT LIVING FACILITY	61 RESIDENTS (1 SPACE/4 RES)	16 SPACES
	20 EMPLOYEES (MAX. SHIFT)	20 SPACES
COMMERCIAL USES		
ADULT DAYCARE	1 EMPLOYEE	1 SPACE
HAIR SALON	(1 SPACE/200 SF) @ 400 SF	2 SPACES
BISTRO	(1 SPACE/3 SEATS) @ 12 SEATS	4 SPACES
GIFT SHOP	(1 SPACE/200 SF) @ 122 SF	1 SPACE
TOTAL REQUIRED		44 SPACES
TOTAL PROVIDED		45 SPACES
HC SPACES REQUIRED		2 SPACES
HC SPACES PROVIDED		2 SPACES

SITE DATA

CURRENT ZONING: CG
PROPOSED ZONING: MU
SITE AREA : 2.0408 ACRES (88,895.30 SF)
PARCEL CONTROL NUMBER: 70-43-44-08-10-002-0010

PROPOSED PRIMARY USE: ADULT LIVING FACILITY 42,770 SF

PROPOSED SHARED USES:

ADULT DAYCARE	440 SF	
HAIR SALON	400 SF	
BISTRO, DINING, & KITCHEN	3800 SF	
GIFT SHOP	120 SF	
	4,760 SF	4,760 SF
TOTAL		47,530 SF

PROPOSED NUMBER OF UNITS: 52
PROPOSED NUMBER OF BEDS: 61

SUITE - 1 BED	23 UNITS	23 BEDS
SUITE - 2 BEDS	2 UNITS	4 BEDS
STUDIO - 1 BED	19 UNITS	18 BEDS
GRANDE STUDIO - 2 BEDS	8 UNITS	16 BEDS
TOTAL	52 UNITS	61 BEDS

FAR: 0.50

BUILDING FOOTPRINT	25,491 SF	
PAVED AREA	27,663 SF	
LANDSCAPE AREA	35,741 SF	
IMPERVIOUS AREA	53,156 SF	60%
PERVIOUS AREA	35,741 SF	40%

MAXIMUM BUILDING HEIGHT: 50'
BUILDING SETBACKS REQUIRED
SIMILAR USES: 15'
DIFFERENT USES: 30'

LOCATION MAP

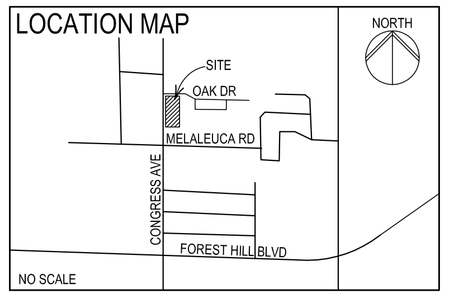

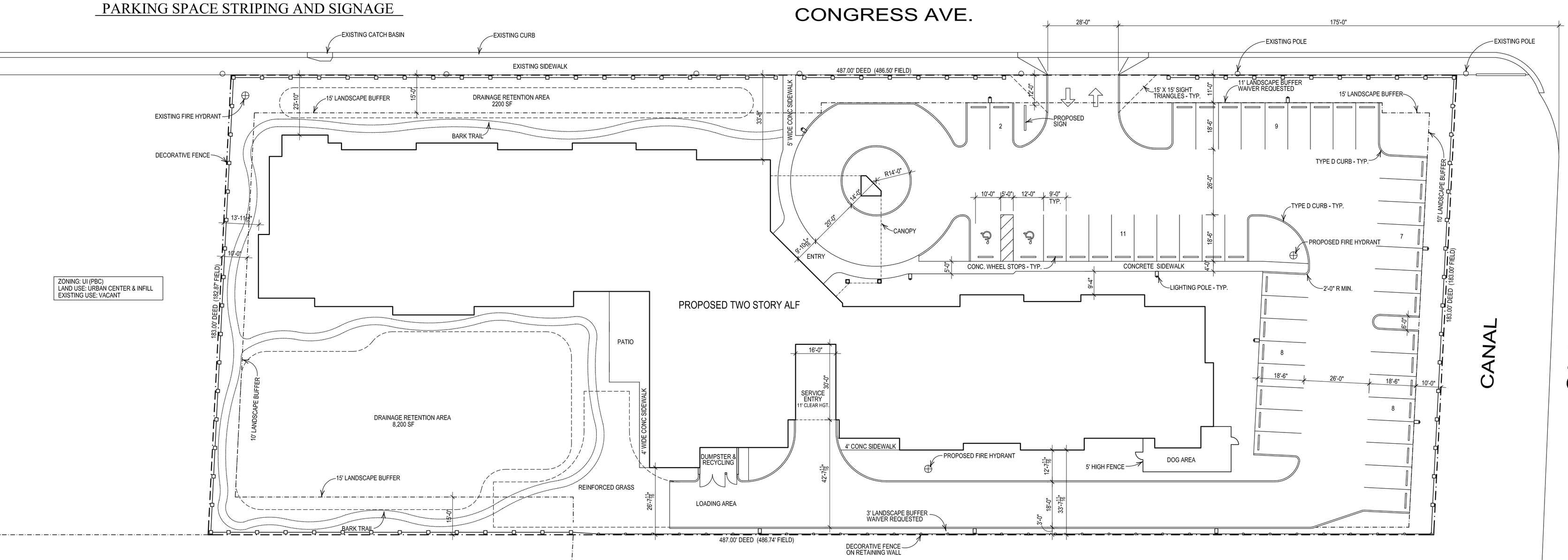

NORTH

0 5' 10' 20' 40'

SITE PLAN

SCALE 1" = 20'-0"

COPYRIGHT 2015, CORY S. CROSS, ARCHITECT
THE CONTENT OF THESE DRAWINGS IS OWNED BY THE ARCHITECT AND SHALL NOT BE USED WITHOUT THE WRITTEN PERMISSION OF THE ARCHITECT EXCEPT FOR THE CONSTRUCTION OF THIS PARTICULAR PROJECT.

TO THE BEST OF MY KNOWLEDGE THESE DRAWINGS COMPLY WITH APPLICABLE BUILDING CODES

CORY S CROSS

NEW BUILDING FOR
THE OAKS
ADULT LIVING FACILITY
1212 S. CONGRESS AVE., PALM SPRINGS, FL 33406

CORY S. CROSS ARCHITECT
AR 11264
2560 Pepperwood Circle S. North Palm Beach, FL 33410
561-281-0900

REVISIONS

DRAWN CC
CHECKED CSC
DATED 5/24/16
PROJECT 15003
SHEET A1